TIMEWELL

DRAINAGE PRODUCTS

(800) 720-8453 | www.timewellpipe.com

TIMEWELL
DRAINAGE PRODUCTS

In February 1982, Don and Susan Colclasure started their own tile manufacturing business to serve the needs of their growing company. Since that time, Don and his team have remained focused and driven by the needs of ag contractors and the farm drainage industry. These 40+ years' experience have led the Timewell leadership to develop an unmatched selection of products and services that are critical for drainage success.

Invest in Your Future – While You Still Can

The Drainage Rush is on! Now is the time to invest in your future - and do it right - while you still can. Pattern tiling is a #1 investment for farm families and Timewell offers a complete drainage solution:

- Our team of professionals who know the drainage market
- Largest network of experienced drainage contractors
- Full-line of water table management products to get your job done right

Resources to Do It Right

We are dedicated to providing products and services that help you make the most of your business and do it right. Pre-planning for comprehensive drainage water management is the best way to maximize yields while minimizing our collective impact on the environment. Timewell offers tools for water management planning and Edge-of-Field practices.

Exclusive Financing Opportunities

Timewell offers unique financing opportunities that aren't available anywhere else. This program, available through participating drainage contractors, makes pattern tiling for as little as $120/acre a reality. Contact your local territory manager for program details.

DRAINAGE RUSH
DO IT NOW – DO IT RIGHT

Table of Contents

Single Wall Tubing	**4-5**
MaxFlex Flexible Dual Wall Pipe	**5-6**
MaXflo Dual Wall Pipe	**6-7**
Accessories	**8-15**
Single Wall Accessories	8-10
Animal Guards	11
Bar Guards	11
Flared End Sections	12
MaXflo Dual Wall Accessories	13
Risers	14
Survey Flags	15
Outlet Markers	15
Tile Probes	15
Anti Seep Collar	15
Inline Water Control Structure	**15**
Lift Stations	**16**
Pumps	**17**
Installation Procedures	**18-19**
Tile Trailers	**20**
Ditch Dams	**20**
MaXair	**21**
Shipping Info/Load Capacities	**22**
Service Territory	**23**

TIMEWELL DRAINAGE PRODUCTS

Serving All Your Drainage Needs!

Please call our toll free number to place your order

800-720-8453

We Ship Direct to You!

Many items available via UPS Shipment!

Delivery Options
Truckloads, and UPS

TIMEWELL DRAINAGE PRODUCTS

SINGLE WALL

Corrugated HDPE Tubing

Specifications, Configurations and Application Rates

Timewell high density polyethylene corrugated pipe is designed for a variety of uses ranging from farm drainage systems to numerous commercial and residential drainage applications.

SPECIFICATIONS
Pipe shall comply with the test methods, dimensions and markings found in ASTM F405 and F667, SCS 606 and AASHTO M252.

Nominal Diameter	Inside Diameter (Average)	Outside Diameter (Average)	Minimum Pipe Stiffness at 5% Deflection	Weight (lbs./20ft.)
3"	3.10"	3.60"	35 psi	4.60 lbs
4"	4.05"	4.60"	35 psi	6.85 lbs
5"	5.00"	5.90"	35 psi	10.15 lbs
6"	6.05"	6.90"	35 psi	15.40 lbs
8"	8.15"	9.50"	35 psi	27.40 lbs
10"	10.05"	11.60"	35 psi	40.75 lbs
12"	12.05"	14.20"	35 psi	50.70 lbs
15"	14.95"	17.70"	35 psi	66.10 lbs

AVAILABLE CONFIGURATIONS

Size	Small Pack	Maxi
3"	10', 100'	6200'
4"	10', 100', 250'	3250'
5"	165'	2300'
6"	100'	1685'
8"	20', 405'	920'
10"	20'	625'
12"	20'	370'
15"	20'	220'
18"	20'	NA

DRAINAGE TUBING
Requirements Per Acre
Exclusive of Collector Lines

Spacing	Pipe/Acre*
15'	2,900'
20'	2,000'
30'	1,450'
40'	1,100'
50'	900'
60'	725'
70'	638'
80'	550'

*Estimated

TIMEWELL DRAINAGE PRODUCTS

SINGLE WALL
Tubing Types

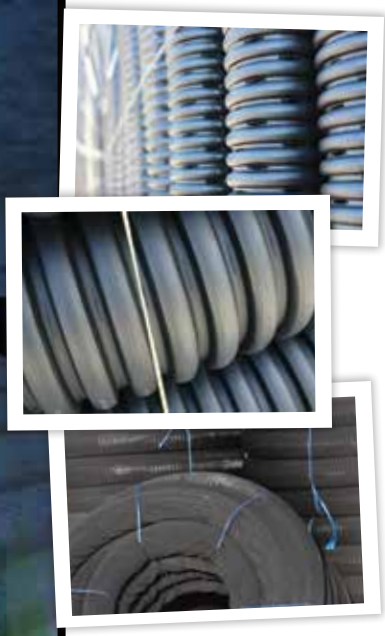

PERFORATED/SLOTTED TUBING
Perforated Tubing is one of the most commonly used types of tile. This tubing has a variety of uses ranging from farm drainage systems to carrying water away from foundations. Available in sizes 3" to 18".

KNIFECUT TUBING (Sand)
Knifecut (Sand) Tubing works the same as perforated field tile, taking in equal amounts of water but restricts the sand and silt from passing through that can potentially plug the tubing. Available in sizes 3" to 15".

KNIT FILTER TUBING (Sock Tile)
Knit Filter Tubing or Sock Tile as it is more commonly referred to, is a polyester wrapped perforated tile. Commonly used in construction applications and sandy soils, Knit Filter Tubing provides maximum protection against soil infiltration. Most commonly used in sizes 3" through 6". Other sizes available upon request.

SOLID TUBING
Solid Tubing takes in water from one end of the pipe and carries it to the other end without taking water from the surrounding areas. Available in all sizes.

MUCK TUBING
Muck Tubing is designed for use in heavier "gumbo" type soils and soils high in organic content, which are typically not as susceptible to water breakdown. Muck tubing allows the largest water inlets with hole sizes of ½ inch round. Available in sizes 3" – 6" only.

MAXFLEX FLEXIBLE DUAL WALL PIPE

MAXFLEX
Flexible Dual Wall

Exceptional flow characteristics coupled with a refreshing ease of use are key benefits for installers and landowners.

Nominal Diameter	Inside Diameter (Average)	Outside Diameter (Average)	Weight (lbs./20ft.)	Maxi Length
8"	8.06"	9.34"	31 lbs	690'
10"	10.08"	11.87"	53 lbs	455'
12"	12.09"	14.68"	76 lbs	380'
15"	15.12"	17.65"	86 lbs	220'

MaxFlex can be conveniently installed behind your trencher or tile plow.

MAXFLEX FLEXIBLE DUAL WALL PIPE

MAXFLEX

MaxFlex

Flexible Dual Wall Pipe

8" | 10" | 12" | 15"

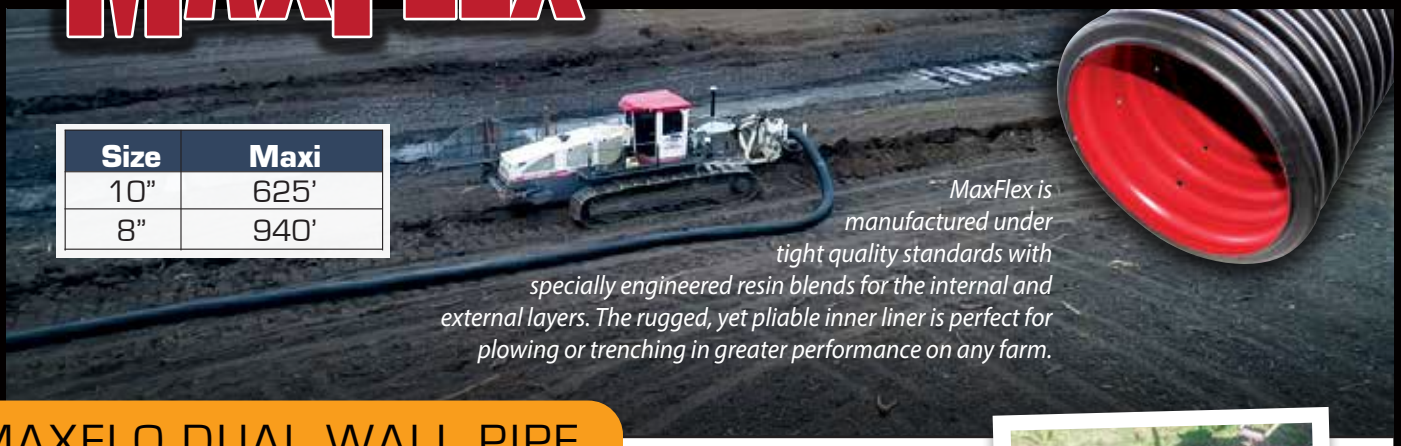

Size	Maxi
10"	625'
8"	940'

MaxFlex is manufactured under tight quality standards with specially engineered resin blends for the internal and external layers. The rugged, yet pliable inner liner is perfect for plowing or trenching in greater performance on any farm.

MAXFLO DUAL WALL PIPE

MAXFLO

MaXflo

Dual Wall

10' & 20' Sticks

HIGH PERFORMANCE | EASY AND SAFE HANDLING | LONG LASTING SOLUTION

MaXflo high density polyethylene corrugated pipe is a Smooth Lined Corrugated Plastic Pipe designed for gravity flow storm sewer, retention/detention and high capacity farm drainage.

10' Sticks are available in 12", 15", 18" and 24". 30", 36" and 48" are available by special order.

SPECIFICATIONS

Pipe shall comply with requirements for test methods, dimensions and markings found in AASHTO designations M252 & M294 or ASTM 2648.

JOINTS

The MaXflo Bell-and-Spigot joint system provides superior load-bearing capability and improved hydraulics. When specified, MaXflo is supplied with an elastomeric gasket meeting the requirements of ASTM F477. The Bell-and-Spigot joint with gasket is tested to ASTM D3212 standards for watertight joint requirements. When applicable, plain end pipe utilizing a wrap around coupler is available.

FITTINGS

Fittings conform to AASHTO M252 or M294. Fittings can be molded or fabricated. Common fittings are branch fittings such as wyes, tees, and end caps as well as in-line joint fittings like couplers and reducers. Couplers must provide adequate strength to maintain pipe alignment and prevent separation.

Nominal Diameter	Inside Diameter (Average)	Outside Diameter (Average)	Minimum Pipe Stiffness at 5% Deflection	Weight (lbs./20ft.)
4"	4.03"	4.73"	49.3 PSI	9 lbs.
6"	6.05"	6.89"	49.3 PSI	23.5 lbs.
8"	8.06"	9.11"	49.3 PSI	31 lbs.
10"	10.08"	11.34"	49.3 PSI	50 lbs.
12"	12.09"	14.40"	50 PSI	71 lbs.
15"	15.12"	17.50"	42 PSI	90 lbs.
18"	18.12"	21.05"	40 PSI	133 lbs.
24"	24.07"	27.65"	34 PSI	216 lbs.
30"	30.48"	35.65"	29 PSI	315 lbs.
36"	36.02"	41.30"	22.5 PSI	420 lbs.
42"	41.40"	47.70"	21 PSI	528 lbs.
48"	48.39"	53.60"	20 PSI	660 lbs.
60"	60.20"	66.40"	15 PSI	1,075 lbs.

MAXFLO Bell/Spigot Connection

DUAL WALL FEATURES:

- In-Line Bell Design
- Soil tight and water tight joints available on 20' sticks with ASTM F477 gaskets
- High performance bell/spigot design for superior connective strength
- All MaXflo bells cover a minimum of two ribs
- All pipe meets or exceeds ASTM 2648
- AASHTO pipe available

TIMEWELL MaXflo pipe meets or exceeds numerous industry standards including:

AASHTO M252	**Requirements and testing for 3"-10" pipe, couplings and fittings** for use in subsurface drainage systems, storm sewers, and in surface drainage
AASHTO M294	**Requirements and testing for 12"-60" pipe, couplings and fittings** for use in surface and subsurface drainage applications **Now with industry inclusion of recycled materials for sustainability and service life**
ASTM F667	**Requirements and testing for 8"-24" pipe and fittings** for materials, workmanship, dimensions, perforations, pipe stiffness, elongation, joint separation resistance, quality of extrusion, brittleness, bond, and markings
ASTM D3350	**Identification of pipe and fitting materials** in accordance with a cell classification system
ASTM D2321	**Recommendations for the installation of pipe** used in sewers and other gravity-flow applications
ASTM D3212	**Specifications for joints of pipe systems** intended for drain, and gravity sewerage at internal or external pressures less than 25 ft head using flexible watertight elastomeric seals
ASTM F477	**Requirements for elastomeric seals (gaskets)** used to seal the joints of pipe used for gravity, low-pressure, and high-pressure applications
ASTM F2306	**Requirements for non-pressure (gravity flow) 8"-60" annular corrugated profile-wall** polyethylene (PE) pipe and fittings for gravity-flow storm sewer and subsurface drainage applications
NTPEP	**National Transportation Product Evaluation Program Certified:** Certification Program of AASHTO (4"-60")

TIMEWELL DRAINAGE PRODUCTS

SINGLE WALL Connecting Accessories

DOWNSPOUT ADAPTORS

DOWNSPOUT ADAPTORS	Bag Qty
2" x 3" x 3" Down Spout Adaptor	50
2" x 3" x 4" Down Spout Adaptor	50
3" x 4" x 4" Down Spout Adaptor	50
4" x 6" x 6" Down Spout Adaptor	50

CLAY TO PLASTIC ADAPTORS

CLAY TO PLASTIC ADAPTORS	
3" Clay to Plastic Adaptor	50
4" Clay to Plastic Adaptor	50
5" Clay to Plastic Adaptor	50
6" Clay to Plastic Adaptor	20
8" Clay to Plastic Adaptor	10
10" Clay to Plastic Adapter	ea.
12" Clay to Plastic Adapter	ea.

ELBOWS	
3" 90 Degree Tile Elbow	25
4" 90 Degree Tile Elbow	25

Custom Order:

Additional downspout adaptor styles available!

Just ask!

ELBOWS

EXTERNAL SPLIT COUPLERS

EXTERNAL SPLIT COUPLERS	
3" External Split Coupler	50
4" External Split Coupler	50
5" External Split Coupler	50
6" External Split Coupler	50
8" External Split Coupler	30
10" External Split Coupler	30
12" External Split Coupler	20
15" External Split Coupler	5
18" External Split Coupler	ea.
24" External Split Coupler	ea.
30" External Split Coupler	ea.
36" External Split Coupler	ea.
42" External Split Coupler	ea.
48" External Split Coupler	ea.

GREAT for MaXflex

DOUBLE WIDE SPLITS	
8" Double Wide Split	ea.
10" Double Wide Split	ea.
12" Double Wide Split	ea.
15" Double Wide Split	ea.

EXTERNAL SNAP COUPLERS	
4" External Snap Coupler	50
6" External Snap Coupler	20
8" External Snap Coupler	5
10" External Snap Coupler	5

EXTERNAL SNAP COUPLERS

TIMEWELL DRAINAGE PRODUCTS

SINGLE WALL Connecting Accessories

TAP TEES

STRAIGHT TEES

BLIND REDUCING TEES

REDUCING TEES

WYES

	Bag Qty
TAP TEES	
3" Tap Tee	50
4" Tap Tee - Long	50
4" Internal Tap Tee - Short	50
5" Tap Tee	25
6" Tap Tee	25
STRAIGHT TEES	
3" Straight Tile Tee (Blow Molded Only)	25
4" Straight Tile Tee (Injection & Blow Molded)	25
5" Straight Tile Tee (Blow Molded Only)	10
6" Straight Tee (Blow Molded Only)	10
BLIND REDUCING TEES	
4" Blind Tee	25
5" x 4" Blind Reducing Tee	10
6" x 5" x 4" Blind Reducing Tee	10
8" x 8" x 6" x 5" x 4" Blind Reducing Tee	5
10" x 10" x 8" x 6" Blind Reducing Tee	3
12" x 12" x 10" x 8" Blind Reducing Tee	3
15" x 15" x 12" x 10" Blind Reducing Tee	1
REDUCING TEES	
4" x 3" Internal Reducing Tee	10
5" x 4" Reducing Tee	10
5" x 4" Internal Reducing Tee	10
6" Cross Reducing Tee	1
6" x 5" x 4" Reducing Tee	10
8" x 8" x 6" x 5" x 4" Reducing Tee	5
10" x 10" x 8" x 6" Reducing Tee	3
12" x 12" x 10" x 8" Reducing Tee	3
15" x 15" x 12" x 10" Reducing Tee	1
WYES	
3" Wye	25
4" Wye (Injection & Blow Molded)	10
5" x 4" Reducing Wye	5
6" x 5" x 4" Reducing Wye	5
8" Wye	ea.

6" Cross Reducing Tee

TIMEWELL
DRAINAGE PRODUCTS

SINGLE WALL
Connecting Accessories

END CAPS

END CAPS	Bag Qty
3" End Cap	50
4" End Cap	25
5" End Cap	25
6" End Cap	25
8" End Cap	10
10" End Cap	10
12" End Cap	5
15" End Cap	ea.
18" End Cap-Split	ea.
24" End Cap- Split	ea.

PLASTIC PLUGS

PLASTIC PLUGS	
3" Plastic Plug	100
4" Plastic Plug	100
4" Plastic Plug - Perforated	100
5" Plastic Plug	100
6" Plastic Plug	100

INTERNAL COUPLERS

INTERNAL COUPLERS	
3" Internal Coupler (Injection Molded)	50
4" Internal Coupler (Blow Molded)	25
4" Internal Coupler (Injection Molded)	50
5" Internal Coupler (Blow Molded)	25
5" Internal Coupler (Injection Molded)	25
6" Internal Coupler (Blow Molded)	20
6" Internal Coupler (Injection Molded)	20
8" Internal Coupler (Blow Molded Only)	5
10" Internal Coupler (Blow Molded Only)	5

REDUCERS

REDUCERS	
5" x 4" Internal Reducer	9
6" x 5" Internal Reducer	9
4" x 3" Reducer	25
6" x 5" x 4" External Reducer	10
8" x 6" Reducer	5
10" x 8" Reducer	5
12" x 10" Reducer	5
15" x 12" Reducer	ea.
15" x 12" x 10" Reducer	ea.

MAR MAC RUBBER COUPLERS

4"
6"
8"
10"
12"
15"
18"
24"
30"
36"
42"
48"

Marmac Couplers are perfect for joining dissimilar pipe types!

All Marmac couplers come with stainless steel tightening bands.

TIMEWELL DRAINAGE PRODUCTS

Accessories

BAR GUARDS

*Hickenbottom Bar Guards are ideally sized for Hickenbottom Risers

BAR GUARDS

- 4" Bar Guard
- 5" Bar Guard
- 6" Bar Guard
- 8" Bar Guard
- 10" Bar Guard
- 12" Bar Guard
- 15" Bar Guard
- 18" Bar Guard
- 24" Bar Guard
- 30" Bar Guard
- 36" Bar Guard
- 42" Bar Guard
- 48" Bar Guard
- *8" Hickenbottom Bar Guard
- *10" Hickenbottom Bar Guard
- *12" Hickenbottom Bar Guard

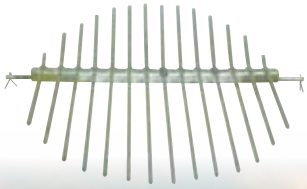

ANIMAL GUARDS

ANIMAL GUARDS

- 4" Animal Guard
- 6" Animal Guard
- 8" Animal Guard
- 10" Animal Guard
- 12" Animal Guard
- 15" Animal Guard
- 18" Animal Guard
- 24" Animal Guard

TIMEWELL
DRAINAGE PRODUCTS

Accessories

HDPE FLARED END SECTIONS

HDPE FLARED END SECTIONS

12”-15” HDPE Flared End Section
18” HDPE Flared End Section
24” HDPE Flared End Section
30”-36” HDPE Flared End Sections

METAL FLARED END SECTIONS

12” Metal Flared End Section
15” Metal Flared End Section
18” Metal Flared End Section
24” Metal Flared End Section
30” Metal Flared End Section
36” Metal Flared End Section
48” Metal Flared End Section

METAL FLARED END SECTIONS

SUMP BASINS & LIDS

SUMP BASINS & LIDS

16” x 24” Sump Pit Liner
16” x 30” Sump Pit Liner
16” Heavy Duty Locking Lid
18” x 24” Sump Pit Liner
18” x 30” Sump Pit Liner
18” Heavy Duty Locking Lid

HINGED FLAP GATES

HINGED FLAP GATES

6” Hinged Flap Gate for Plastic
8” Hinged Flap Gate for Plastic
10” Hinged Flap Gate for Plastic
12” Hinged Flap Gate for Plastic
15” Hinged Flap Gate for Plastic
18” Hinged Flap Gate for Plastic
24” Hinged Flap Gate for Plastic

Larger sizes available!

MAXFLO DUAL WALL **Accessories**

MAXFLO ELBOWS

MAXFLO ELBOWS

Elbows offered in all sizes 4"- 48" with bends offered in 22.5, 45 & 90 degrees. Custom bends are also available!

MAXFLO TEES

MAXFLO TEES

4" x 4" MaXflo Tee
6" x 6" MaXflo Tee
8" x 8" MaXflo Tee
10" x 10" MaXflo Tee
12" x 12" MaXflo Tee
15" x 15" MaXflo Tee
18" x 18" MaXflo Tee
24" x 24" MaXflo Tee
30" x 30" MaXflo Tee
36" x 36" MaXflo Tee
42" x 42" MaXflo Tee
48" x 48" MaXflo Tee

MAXFLO WYES

MAXFLO WYES

4" MaXflo Wye
6" MaXflo Wye
8" MaXflo Wye
10" MaXflo Wye
12" MaXflo Wye
15" MaXflo Wye
18" MaXflo Wye
24" MaXflo Wye
30" MaXflo Wye
36" MaXflo Wye
42" MaXflo Wye
48" MaXflo Wye

MAXFLO REDUCING WYE

Dual Wall Reducing Wyes available in all sizes 4"- 48"

MAXFLO REDUCERS

Dual Wall Reducers available in all sizes 4"- 48"

MAXFLO REDUCING TEE

Dual Wall Reducing Tees available in all sizes 4"- 48"

New!

MAXFLO Risers

MAXFLO Risers

MaXflo Risers offer larger sizes than traditional surface inlets. Risers are immediately available and competitively priced, Custom sizes and configurations available.

Section 1: 1" holes **Section 2:** 5/16" holes

8" x 6"	Special configurations available.
10" x 6"	
12" x 3'	
12" x 6'	
15" x 3'	
15" x 6'	
18" x 3'	
18" x 6'	
24" x 3'	
24" x 6'	

Larger sizes available upon request

1.5' of 1" holes

1.5' of 5/16" holes

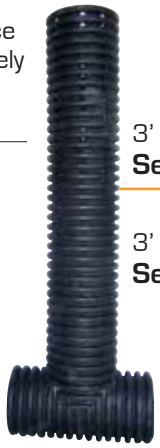

3' of 1" holes **Section 1**

3' of 5/16" holes **Section 2**

6" Hickenbottom Riser

HICKENBOTTOM RISERS

5" Hickenbottom Riser	1" Holes	Section 1
5" Hickenbottom Riser	5/16" Holes	Section 2
6" Hickenbottom Riser	1" Holes	Section 1
6" Hickenbottom Riser	5/16" Holes	Section 2
8" Hickenbottom Riser	1" Holes	Section 1
8" Hickenbottom Riser	5/16" Holes	Section 2
10" Hickenbottom Riser	1" Holes	Section 1
10" Hickenbottom Riser	5/16" Holes	Section 2
12" Hickenbottom Riser	1" Holes	Section 1
12" Hickenbottom Riser	5/16" Holes	Section 2

12" Hickenbottom Riser

HICKENBOTTOM RISER INLET TEES

5" Hickenbottom Tee
6" Hickenbottom Tee
8" Hickenbottom Tee
10" Hickenbottom Tee
12" Hickenbottom Tee

6" Precision Round Bottom Tee

PRECISION RISERS

6" Precision Intake 1" Holes Section 1
6" Precision Intake 5/16" Holes Section 2
8" Precision Intake 1" Holes Section 1
8" Precision Intake 5/16" Holes Section 2
10" Precision Intake 1" Holes Section 1
10" Precision Intake 5/16" Holes Section 2

8"-10" Precision Combo Tee

6" Precision Flatbottom Tee

PRECISION RISER INLET TEES

6" Precision Round Bottom Tee
6" Precision Flatbottom Tee
8" - 10" Precision Combo Tee

MISCELLANEOUS ITEMS

MARKER FLAGS AND POSTS

OUTLET MARKER POST

HOLE SAWS

POWER PROBE

MISCELLANEOUS ITEMS

Timewell Tile Tape

4" x 5" T/T Marker Flag
Outlet Marker Post
7' 11" Red Intake Marker Flag

3 1/8" Hole Saw
4 1/8" Hole Saw
5" Hole Saw
6" Hole Saw

S/S 5' x 5/16" Power Probe

Mud Slinger Shovel Flat Tip
Mud Slinger Shovel Round Tip
Long Handle Shovel
Super Crummer Shovel

2' x 2' Anti Seep Collar
4' x 4' Anti Seep Collar

TILE TAPE

SHOVELS

ANTI SEEP COLLARS

INLINE WATER CONTROL

Inline Water Control Structure:

- Rugged 1/2 " PVC structure
- Heavy steel lockable lid
- Stainless steel screws and custom anodized aluminum corner extrusions are used for strength and durability
- 5" X 7" Stoplogs for adjustability
- Flexible couplers allow PVC, plastic pipe, or other materials to be easily attached (please specify type of pipe when ordering)
- 5 year warranty on all parts

Call today for pricing on your custom structures!

Lift Stations

NO GRAVITY OUTLET AVAILABLE? NO PROBLEM!

You can still install a cost effective drainage system with a lift station from Timewell.

WITH A LIFT STATION, YOU CAN:

- Control the water table in the field
- Gain more grade on laterals

FEATURES & BENEFITS

- Manufactured from durable HDPE pipe
- No degradation or corrosion
- Jobsite ready
- Standard 4'x6' welded base reduces buoyancy
- Heavy-duty lid secures pump and discharge pipe

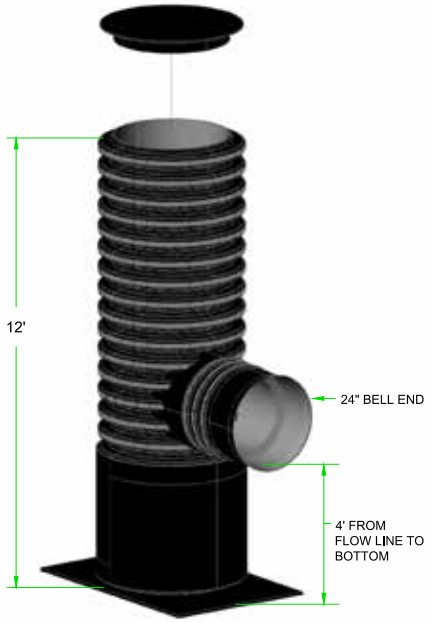

Standard 36" tank with 24" outlet in stock

Custom sizes and designs available upon request

Why buy from multiple places?
Timewell offers a complete line of lift stations and accessories. Ask your sales representative for details.

Pumps

Timewell offers a complete line of submersible pumps to meet all your lift station projects.

The stainless steel, axial-flow construction provide an economical solution for high-volume, low-head flow applications. The stainless steel construction means that the pumps are corrosion resistant and will not rust, making them last longer than conventional cast iron pumps.

Standard applications cost just pennies a day to operate.

Pumps are available in vertical or horizontal versions, single or three phase, a variety of horsepower and voltages to meet the unique needs of your application.

FEATURES & BENEFITS

- Corrosion Resistant all Stainless Steel Construction
- High Volume: 50 to 1,450 GPM
- Low Head: 2' to 25' of Total Dynamic Head
- Fixed speed or variable-flow pumping
- Axial-Flow lift for smooth, low vibration and low pressure operation
- Water lubricated motors are environmentally safe

VARIETY OF SIZES AVAILABLE

- Single or Three Phase
- 1/2 to 15 Horsepower
- 200, 230, 460 or 575 Volts
- Vertical or Horizontal Style

Single phase and three phase control panels are available to operate the pumps. Single phase panels contain the start and run capacitors. Three phase controls are used for three phase 200, 230, 460 and 575 volt pumps and contain a motor starter and transformer. Both are available with (deluxe) or without (standard) a switch.

TIMEWELL DRAINAGE PRODUCTS

An Overview of Agricultural Drainage System Installation

The following is a brief overview of the recommended steps taken to install a quality pipe system. Additional research is recommended for any unique installation.

Timewell's recommended installation procedures listed below are based on ASTM F449
(Underground Subsurface Installation of Corrugated Polyethylene Pipe for Agricultural Drainage or Water Table Control)

PIPE HANDLING

Certain steps should be taken for handling and storing pipe properly on jobsites so as to protect the pipe until ready for installation. Storage handling and care should be done so as not to damage the pipe. A flat, smooth surface is preferred. Additional considerations for site conditions, weather, seasonal elements, and animals should be considered when handling and storing. If pipe arrives in pallets, it should remain in pallets until installation. Dragging dropping or hitting pipe on the ground or other objects may cause damage. Coils of pipe should be stored on a flat, smooth surface and should be protected from fire hazards. Inspect all pipe and material before installation.

Figure 1

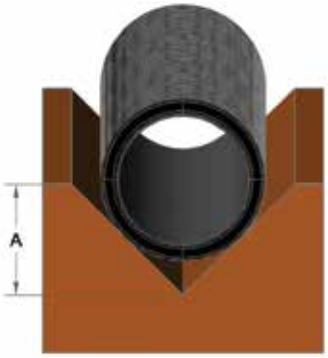

'V' Trench

Chart 1
'V' Trench Depth

Pipe Diameter	Depth Figure 1 'A'
3"	5"
4"	6"
6"	8"
8"	11"

TRENCH SHAPE

The trench bottom should be shaped when pipe is installed at depths of 8 feet or less. The 90-degree "V" bottom shown in Figure 1 is the preferred shape for pipe less than 8 inches. For pipe 8 inches or greater, the circular or trapezoidal groove shown in Figure 2 should be used. The curve of the groove should closely fit the outside of the pipe, and can be made with a shaped trencher or backhoe with a shaped bucket known as a "spoon". Refer to Charts 1 and 2 for recommended trench dimensions.

TRENCH DESIGN

Precautions should be taken to ensure conditions are suitable for pipe installation. Water, soft muck, rock or other material unable to provide long-term pipe support are unacceptable and should be removed and replaced with acceptable materials. If soft areas remain after excavation or in areas where native soil can migrate into backfill, a synthetic fabric or geotextile should be used to separate native soil from backfill.

Figure 2

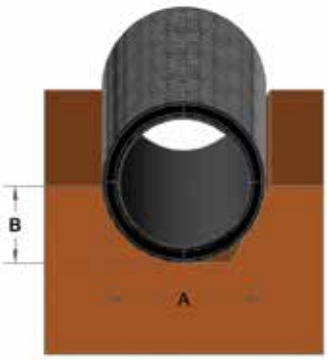

Circular or Trapezoidal Trench

Chart 2
Circular or Trapezoidal Trench Dimensions

Pipe Diameter	Width Figure 2 'A'	Depth Figure 2 'B'
10"	11.4"	5.7"
12"	14.4"	7.2"
15"	17.5"	8.8"
18"	21.1"	10.6"
24"	27.7"	13.9"
30"	35.7"	17.9"
36"	41.3"	20.7"
42"	47.7"	23.9"
48"	53.6"	26.8"
60"	66.4"	33.2"

ALIGNMENT

Equipment operating on uneven ground surfaces should use a grade control system capable of maintaining the specified depth and grade. The pipe feeding system should hold the pipe in place in the bottom of the trench until secured by the bedding, blinding, or envelope material.

FITTINGS, COUPLERS & ENDCAPS

All fittings should be compatible with the pipe. Couplers should be used to connect pipe together, and end caps or end plugs must be installed on the termination of each line.

BACKFILLING

The trench should be backfilled as soon as possible. Material should be placed so that displacement or deflection of the pipe will be minimized and within acceptable limits. Most plow installations require a minimum of backfilling, yet care must be taken to ensure that the trench is filled and bridging does not occur. Open trenches should be overfilled to allow consolidation, or the backfill should be compacted to reduce the amount of settling.

Chart 3
Acceptable Backfill Material and Compaction Requirements

Description	Soil Classification ASTM D2321	Soil Classification ASTM D2487	Minimum Compaction Standard Density %
Graded or crushed stone Crushed gravel	Class I	-	Dumped*
Well-graded sand, gravel, and gravel/sand mixtures; Poorly graded sand, gravel and gravel/sand mixtures; little or no fines	Class II	GW CP SW SP	85%
Silty or clayey gravel, Gravel/sand/silt or gravel and/clay mixtures, silty or clayey sands, sand/clay or sand/silt mixtures	Class III	GM GC SM SC	90%
Inorganic silts and low to medium plasticity clays; gravelly, sandy, or silty clays; some fine sands	Class IVA	ML CL	90%

*Material shall be "knifed" into the haunch area of the pipe by use of a shovel or similar means.

COMPACTION

Backfill materials should be installed and compacted in accordance with Chart 3 and ASTM F449. The minimum recommended cover needed to protect the pipe from crushing under live loads is 2 feet, except in organic soils where the minimum is 2.5 feet. These minimum depths are recommended to prevent crushing of the pipe by normal agricultural vehicle loads. Other drainage factors could require depths of up to 6 feet.

Maximum burial depths are determined by a number of factors including compaction, type of bedding, trench design and pipe stiffness. Contact your local Timewell representative for more information.

MATERIAL SELECTION

Choosing proper backfill materials is essential to maintaining adequate pipe support. Non-cohesive soils such as sand or plastic clay will need to be compacted to remove voids. Class IVA materials may increase pipe deflection, therefore additional examination should be conducted before using Class IVA materials. Backfill material descriptions and guidelines can be found in Chart 3.

OUTLET CONSIDERATIONS

A length of rigid or semi-rigid non-perforated pipe should be used as an outfall of subsurface drains. Where backflow of surface water is possible, hinged gates should be used. The projection of the outlet pipe from the bank should be as little as possible and not more than one third the length, to provide the required support.

RODENT PROTECTION

The outlet should be equipped with an animal guard to protect the system from entry and damage by rodents or other animals. Where pipe is connected to old lines that may serve as animal runs, an animal guard should be installed within the line to restrict animal travel.

Tile Trailers

Timewell Drainage Products offers the toughest, most durable tile stringing trailer on the market.

Choose from Single or Tandem Axle

Single & Tandem Axle Trailers

- **11' 2" turn table**
- **DC Power unit with battery**
- **Electric brakes**
- **Highway rated tires**
- **Tail lights**
- **Operate breaks & stringer from tractor cab**
- **Large center spindle to keep maxis in place**
- **Powder coat paint**
- **Highest resale value**

Call our Customer Service Department for Details, Today!

Truck Mount Kits and 3 Point Hitch Models Available
Get the same dependable structure installed right on your truck or tractor!

Fight Soil Erosion and Farm More Acres!

Timewell's reinforced HDPE ditch dams let you farm right up to the edge of the field.

- Increases acres you can safely farm
- Limits soil erosion
- Helps secure drainage outlet

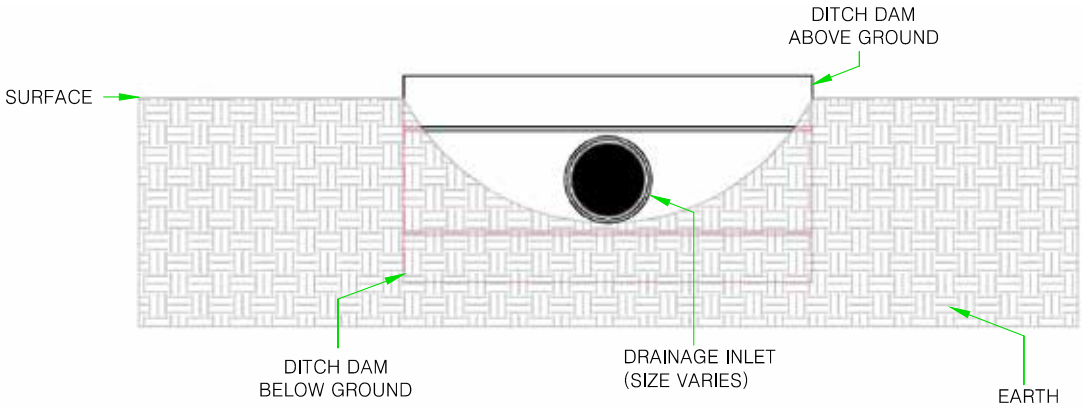

MAXAIR
GRAIN AERATION PIPE

Timewell also manufactures specialized tubing products used for grain aeration. Temporary grain storage units keep your grain dryer–longer PLUS...

- Grain stays dryer so there is less waste
- MaXair tubing does not rust, or corrode.
- Distributes more air, with greater efficiency
- Easier to install than metal pipe
- MaXair is tough enough to withstand even the heaviest grain loads
- Covered with a TIMEWELL exclusive woven sock, preventing grain from clogging the holes and maximizing air flow
- Provides for 360 degree aeration.
- MaXair is the most durable grain aeration pipe available

AVAILABLE PRODUCTS:

Screen Sock
12"
15"
18"
24"
30"
36"

External Couplers
12"
15"
18"
24"
30"
36"

End Caps
12"
15"
18"
24"
30"
36"

Tees
12"
15"
18"
24"
30"
36"

MaXair Pipe Sizes Available
12"
15"
18"
24"
30"
36"

No Sock Pipe (Triple Perf)
18"
24"

Single Wall Pipe
6"
8"

Internal Single Wall Couplers
6"
8"

Value Engineered Design
Proven Pipe
Turn Key Flat Storage
Exceptional Service

Have Replacement Parts
SHIPPED
LTLs & UPS Available

CALL TIMEWELL TODAY
800-720-8453

TRUCK LOAD WORKSHEET

Description	Length	Truck Load Quantity	Unit	Point Value Per Unit	# Of Pieces Ordered =	Total Point Value
3”	100’	220	Rolls	0.455		
	6200’	6	Rolls	16.666		
4”	100’	180	Rolls	0.5		
	250’	76	Rolls	1.315		
	3250’	6	Rolls	16.666		
5”	165’	76	Rolls	1.315		
	2300’	6	Rolls	16.666		
6”	100’	76	Rolls	1.315		
	1685’	6	Rolls	16.666		
8”	20’	240	Sticks	0.416		
	405’	9	Rolls	11.111		
	920’	6	Rolls	16.666		
10”	20’	180	Sticks	0.555		
	625’	6	Rolls	16.666		
12”	10’	288	Sticks	0.347		
12”	20’	120	Sticks	0.833		
	370’	6	Rolls	16.666		
15”	10’	195	Sticks	0.526		
15”	20’	80	Sticks	1.25		
	220’	6	Rolls	16.666		
18”	10’	132	Sticks	0.735		
18”	20’	56	Sticks	1.785		
24”	10’	66	Sticks	1.388		
24”	20’	30	Sticks	3.333		
30”	10’	42	Sticks	2.38		
30”	20’	18	Sticks	5.555		
36”	10’	28	Sticks	3.57		
36”	20’	12	Sticks	8.333		
42”	10’	22	Sticks	4.45		
42”	20’	10	Sticks	10		
48”	10’	14	Sticks	7.14		
48”	20’	6	Sticks	16.666		

Total Point Value Of Order

Divide By 100

100 Points per truck load — TOTAL TRUCK LOAD FOR ORDER

Timewell Delivery

At Timewell we guarantee next day delivery.

Palletized Load Quantity for MaXflo	
Number of Sticks per Pallet	
4”	63
6”	33
8”	27
10”	18
Number of Pallets per Truck	
4”	12
6”	12
8”	8
10”	8
Number of 10’ MaXflo Sticks on Trailer Deck	
12”	48
15”	35
18”	20
24”	12
30”	6
36”	4
48”	2

Van Trailer Capacities:
6” x 100’ - 54 4” x 100’ - 130

Next Day *Delivery Available* on full load maxi-coil orders

"Timewell Jefferson Yard is convenient and James in the yard is great."

Joe Schollmeyer, JKS Excavating
Fort Atkinson, WI

"I don't expect perfect, but I do expect consistency and honesty and that is what we get from Timewell".

Teel Warbington
(and two of the next gen of Warbington Farmers)
Warbington Farms
Vienna, GA

TIMEWELL
SERVICE TERRITORY

"Timewell has always provided us with a quality product, excellent servide at competitive prices."

Gary Youngkrantz, Youngkrantz Bros, Lake Lillian, MN

"We've been customers of Timewell for 14 years. We started doing business with them because of the exceptional service and great quality. That's also why we are still with Timewell."

Derek Davis
Derek Davis LLC, Marshall, MO

"We love how the staff goes out of their way. Timewell feels like family to them. They are appreciative that their sales rep responds quickly and attentively. They believe Timewell is unique and enjoyable to work with because of the "mom and pop" feel to the way we do business and operate. They enjoy the non-corporate feel there is to doing business with us."

Kevin Burnett, Brad Mitchell and "Lightening" Larry Duncan
Mitchell Farms
Clay, KY

TIMEWELL

DRAINAGE PRODUCTS

196 US 24 1075N Ave
Timewell, IL 62375

201 W. Plymouth St
Jefferson, WI 53549

201 Donan Drive
Providence, KY 42450

1307 Badger Avenue
Plainfield, IA 50666

1200 9 Avenue
Sibley, IA 51249

18325 S CR 580 West
Remington, IN 47977

(800) 720-8453 | www.timewellpipe.com